THE UNIVERSITY OF THE SOUTH PACIFIC

CS241: Software Design & Implementation

School of Information Technology, Engineering, Mathematics and Physics

Final Examination
Semester 2 2022

F2F Mode

Duration of Exam: 3 hours + 10 minutes

Reading Time: 10 minutes

Writing Time: 3 hours

Total marks: 100

Instructions:

1. *This exam three sections.*
2. *Section A 35 marks, Section B 30 marks, Section C 35 marks.*
3. *This exam is worth 40 % of your overall mark.*
4. *The minimum pass mark for this exam is 40 out of 100 marks.*
5. *There are 17 pages in this paper including this cover page.*
6. *This is a closed book Exam.*
7. *Answer the questions in the spaces provided in the booklet.*
8. *All the questions are compulsory. There are no choices.*

Student Name: _____

Student ID: _____

~ALL THE BEST~

Section A: Short Answers (35 Marks)

Question 1 **(10 marks)**

a) The Incremental methodology model is a model used in system development where some functionality of the system and deliver them to customer. Discuss at least two advantages and one disadvantage of such model. (3 marks)

- system functionalities are available before the entire system is delivered.
- Early increments act as a prototype to help elicit requirements for later increments.
- Lower risk of overall project failure.
- The highest priority system services tend to receive the most testing.
- Disadvantage – final product is unknown till end or delivered at once
- It might be difficult to integrate or test components with overlaps

Mark Allocation: 2 marks – 2 adv and 1 mark – 1 dis

b) Give any two strengths of Pair Programming. (2 marks)

- All code is written by two programmers sharing a computer ("Pair programming")
- If one programmer leaves, the other is sufficiently knowledgeable to continue working with another pair programmer
- An inexperienced programmer can learn from his or her more experienced team member
- Centralized computers promote egoless programming

Mark Allocation: 1 mark each for each strength

c) You are assigned to develop a new social media mobile app. Registered users can use the app to find the location of their friends. The credit card details are required for registration as every time a user requests for friends location, $0.05 is charged. The app will be continually upgraded to enhance user experience.
Outline at least 2 ethical and 1 social issues that you as a develop need to take into account when developing this app. (3 marks)

- Intellectual property rights - Engineers should be aware of local laws governing the use of intellectual property such as patents, copyright, etc. They should be careful to ensure that the intellectual property of employers and clients is protected.
- Data is kept confidential
- PRODUCT - Software engineers shall ensure that their products and related modifications meet the highest professional standards possible
- JUDGMENT - Software engineers shall maintain integrity and independence in their professional judgment.
- PROFESSION - Software engineers shall advance the integrity and reputation of the profession consistent with the public interest.

Or any other relevant issues

Mark Allocation: 2 marks – 2 ethical and 1 mark – 1 social

d) Beyond Chief Programmer and Democratic Teams is a better way to organize teams as shown in figure below, which uses strengths of democratic teams and uses CPT in conjunction with code walkthroughs or inspections.

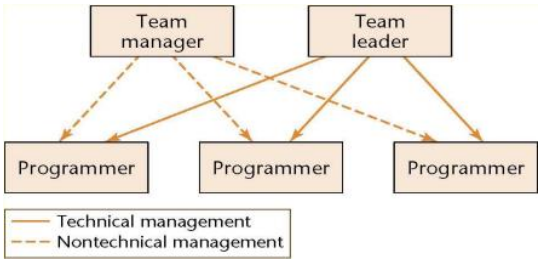

Give any two advantages of Beyond Chief Programmer and Democratic Teams. (2 marks)

- It is easier to find a team leader than a chief programmer
- Each employee is responsible to exactly one manager — lines of responsibility are clearly delineated
- The team leader is responsible for only technical management

Mark Allocation: 1 mark each

Question 2 **(5 marks)**

a) Consider the diagram below and answer the questions that follows:

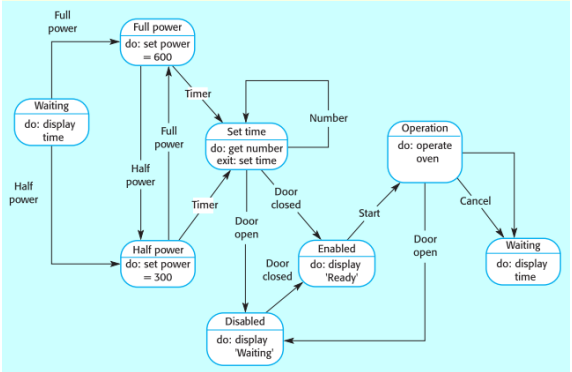

I. Name the diagram above. (1 mark)

State machine model or a finite state machine model.

II. List at least one characteristics of the identified diagram in part [i] above. (1 mark)

- A finite state machine is a system that can be in exactly one state at a time.
- OR
- The machine has to transition from one state to another in to perform
- different actions.
- The global number of the states it can be in is a finite number.
- The finite state machines are flexible.

- Easy to move from a significant abstract to a code execution.
- Low processor overhead.
- Easy determination of reachability of a state. etc.

Mark Allocation: 1 mark for any correct answer

III. Why there is no final step? (1 mark)

- the model is dependent on state, based on the state, the action is taken by the system
- Or any other relevant explanation.

b) With help of the diagram describe the basic interactions in Model-View-Controller (MVC). (2 marks)

Model-View-Controller Pattern – Separates presentation and interaction from the system data. The Model component manages the system data and associated operations on that data. The View component defines and manages how the data is presented to the user. The Controller component manages user interaction passing the interactions to the View and the Model.

Question 3 **(10 marks)**

a) Consider the following system with 13 modules.

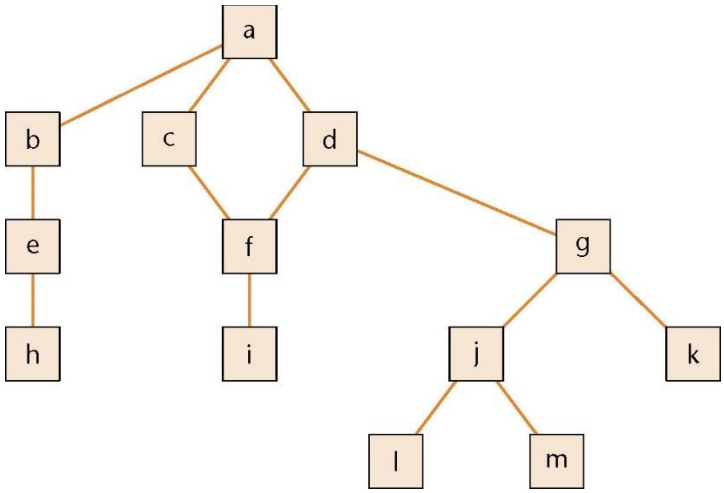

a) List the ways you can integrate this system using the top-down integration approach, i.e write the sequence of modules you will integrate using top-down integration method. (2marks)
a,b,c,d,e,f,g h,i,j,k,l,m

Mark Allocation: all correctly answered = full mark. Partial mark for some correct.

b) Describe the top-down integration strategy and give one advantage of this method. (2 mark)

In the Top-Down Integration testing approach, the main module is designed at first then the submodules/subroutines are called from it. *Ensure an example is used to explain.

- Fault isolation
- Stubs are not wasted
- Major design faults show up early

Mark Allocation: 1 mark explanation and 1 mark adv.

b) A program has three logical operations which are as shown below:

Less than 5	Between 5 and 10	More than 10

Using partition testing and equivalence partition method, which inputs will you pass in the test cases to cover all the relevant inputs are tested. (3 marks)

- 4 and 5
- Any number between 6 and 9
- 10 and 11
  // 1 mark each

c) The CS241 students were developing a vaccination passport web application using MVC architecture. Group 5 distributed the task evenly within the group and managed the software development process well. During the demo individual programs with stubs were working fine but overall the project was not working. What went wrong? What kind of integration and system testing would you choose and why? (3 marks)

The integration testing was delayed till the last moment. It seems they used bottom up testing approach. (1 mark)

Since the architecture testing of MVC is important they should have used top down approach integration testing to check if the architecture is working in mobile app environment or not. Since the majority of the code is already written in web using MVC so sandwich approach is not suitable as it is assumed that the 'operational code' are already well tested in the web application. (2 marks)

Question 4 **(10 marks)**

a) Object-oriented database is developed based on object-oriented programming techniques. Give an advantage and disadvantage of this database. (2 marks)

Advantage:

- Object databases bring permanent persistent to objects.
- Reading and mapping an object database data to the objects is direct without any API or OR tool. Hence **faster data access** and better performance.

- A rich API for Java, Java Persistence API (JPA) provides a collection of classes and methods to persistently store the vast amounts of data into a database.

Disadvantage:

- Object databases are not as popular as RDBMS
- Not many programming language support object databases and RDBMS have SQL as a standard query language
  // 1 mark each

b) In software engineering, a design pattern is a general repeatable solution to a commonly occurring problem in software design. Explain Observer Pattern form of design patterns. (2 marks)

Separates the display of the state of an object from the object itself and allows alternative displays to be provided. When the object state changes, all displays are automatically notified and updated to reflect the change.
OR
Define a one to many dependency between objects so that when one object changes state, all its dependents are notified automatically.

Mark Allocation: 2 mark explanation. 1 for partial correct.

c) What are the benefits of using a change request form as the central document in the change management process? (1 mark)
Keeping track and record of the changes requested and done to assess its impact and decide whether the change should take priority over the features planned for the next increment of the system

d) There are different levels of testing. Differentiate between Alpha Testing and Beta Testing. (2 marks)

Alpha Testing or Verification is executing programs in a simulated environment and test inputs and outputs
Beta Testing or Validation is Testing in a live user environment and test for response times, performance under load and recovery from failure

1 mark each

e) Once the software is developed, there are different implementation strategies to deploy the system. One of the strategy is Parallel Running. Explain Parallel Running strategy and give an advantage and disadvantage of this technique (3 marks).
Old system runs alongside the new system for a period of time
Adv:
provides fallback if there are problems
outputs of the two systems can be compared, so testing continues into the live environment

Disadvantage:
high running cost including staff for dual data entry
cost associated with comparing outputs of two systems
users may not be committed to the new system

Mark Allocation: 1 mark explanation. 1 adv and 1 dis.

Section B: Implementation (30 Marks)

Question 5 **(10 marks)**

a) What does encapsulation refers to in object-oriented programming (OOP), [2 marks]

In object-oriented programming (OOP), encapsulation refers to the bundling of data with the methods that operate on that data, or the restricting of direct access to some of an object's components

b) The access modifiers in Java specifies the accessibility or scope of a field. There are four types of Java access modifiers: Private, Default, Protected and Public. With respect to the OOP and inheritance, differentiate between public, private and protected. (3 marks)

Private: The access level of a private modifier is only within the class. It cannot be accessed from outside the class. OR The code is only accessible within the declared class

Protected: The access level of a protected modifier is within the package and outside the package through child class. If you do not make the child class, it cannot be accessed from outside the package. OR The code is accessible in the same package and subclasses

Public: The access level of a public modifier is everywhere. It can be accessed from within the class, outside the class, within the package and outside the package. OR The code is accessible for all classes

c) The multi-threaded program contains two or more parts that can run concurrently, and each part can handle a different task at the same time making optimal use of the available resources specially when your computer has multiple CPUs. One way to create multi-threaded program is by Creating a Thread by Implementing a Runnable Interface as shown below:

```
class greetThread implements Runnable{
      private String greeting;
      public greetThread(String greeting){
            this.greeting = greeting;
      }
      public void run(){
            try{
                  for (int i = 1; i <= 5; i++){
                        System.out.println(i +": " + greeting);
                        Thread.sleep(500);
                  }
            }
            catch (InterruptedException e){
            e.printStackTrace();
            }
      }
```

```
        }
```

Implementing two threads of `greetThread` in the driver given below. Only write withing the main. (3 marks)

```
      public class mythread {
            public static void main(String [] args){
                  // pass "Hello Program" in first threaded
                  // pass "Bye Program" in second thread


                  Runnable r1 = new greetThread("Hello");
                  Runnable r2 = new greetThread("bye");
                  Thread t1 = new Thread(r1);
                  Thread t2 = new Thread(r2);
                  t1.start();
                  t2.start();

                  // ½ mark each


            }
      }
```

d) What is the output of the following code fragment? Explain the output. (2 marks)

```
class Main {
        int x=5;
        int y=10;
        String name = "Messi";

        public static void main(String args[]) {
                Main pnt = new Main();
                System.out.println("pnt is " + pnt.name + " " + pnt.x + " " +
            pnt.y);
        }
}
```

```
// No error. Output pnt is Messi 5 10
```

Question 6 **(5 marks)**

Using the following code snippet to answer the following questions.

```
class Language {
  public void displayInfo() {
```

```
    System.out.println("Common English Language");
  }
}

class Java extends Language {
  @Override
  public void displayInfo() {
    System.out.println("Java Programming Language");
  }
}

class Main {
  public static void main(String[] args) {
    Java j1 = new Java();
    j1.displayInfo();

    Language l1 = new Language();
    l1.displayInfo();
  }
}
```

a) What is the output of the following code fragment? Explain the output. (3 marks)

Java Programming Language

Common English Language

1 mark for valid explanation in terms of instant or object

b) With example explain method overriding and method overloading in OOP. (2marks)

Overriding - during inheritance in Java, if the same method is present in both the superclass and the subclass.

Overloading - In a Java class, we can create methods with the same name if they differ in parameters.

Question 7 **(15 marks)**

Use the following UML class diagram to answer the given questions:

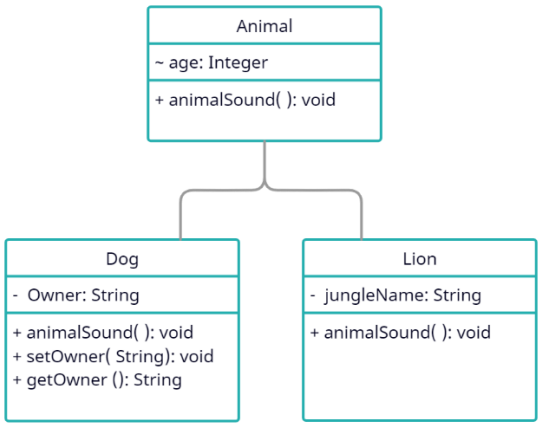

a) Write the implementation of `Animal` class. Write any/all member functions implementation also. The `animalSound` should print "`The animal makes a sound`". (2 marks)

```
class Animal {
        protected int age;       1 mark

        public void animalSound() {
          System.out.println("The animal makes a sound"); 1 mark
        }
}
```

b) Write the implementation of `Lion` class. Write any/all member functions implementation also. The `animalSound` should print "`The Lion roar`". (2 marks)

```
class Lion extends Animal {
        private String jungleName;       1 mark
        public void animalSound() {
          System.out.println("The Lion roar");    1 mark
        }
}
```

c) Write the implementation of `Dog` class. Write any/all member functions implementation also. The `animalSound` should print "`The Dog bark`". (4 marks)

```
class Dog extends Animal {
        private String Owner;     1 mark
        public void animalSound() {
          System.out.println("The Dog bark");   1 mark
        }
        public void setOwner(String owner) {     1 mark
          Owner = owner;
        }
        public String getOwner(){      1 mark
             return Owner;
        }
}
```

d) Complete the main driver class to create objects of Dog and Lion classes. Call the relevant setter, getter functions and other member attributes/functions to achieve the from output. (5 marks)

```
The Lion roar
The Dog bark
Owner: Peter Fox Age: 5
```

```
class Main {
       public static void main(String[] args) {

          Lion myLion = new Lion();   // ½ mark
          Dog myDog = new Dog();      // ½ mark

          myLion.animalSound();     // ½ mark
          myDog.animalSound();      // ½ mark
          myDog.age = 5 ;           // 1 mark
          myDog.setOwner("Peter Fox");  1 mark
          System.out.println("Owner: " + myDog.getOwner() + " Age: " + myDog.age
      );   // 1 mark









       }
}
```

e) Polymorphism makes cloning work. Do you need *shallow* or *deep* cloning for the Dog class? Explain with reasons. (2 mark)

Deep cloning. (1mark)
Reason: shallow clone only clones data types. (1 mark)

Section C: Case Study (35 Marks)

Question 8 **(12 marks)**

a) The following is an event-partitioned data flow diagram for the Email.

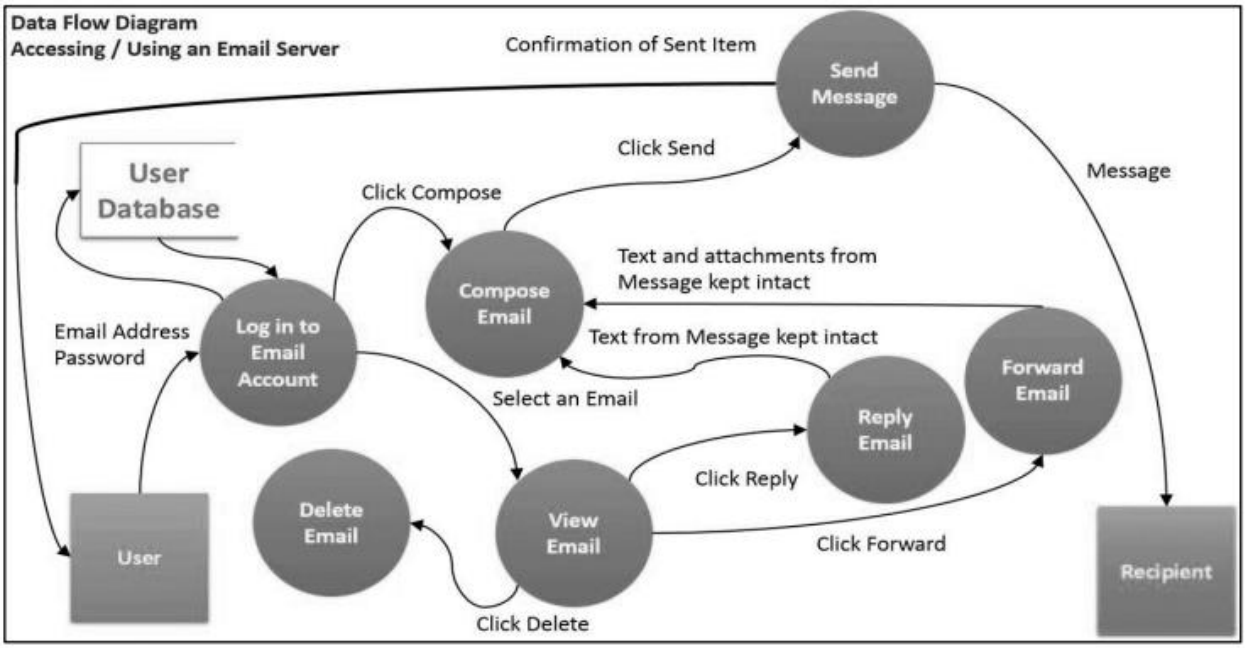

Using the transaction analysis technique, develop a structure chart for it. [5 marks]

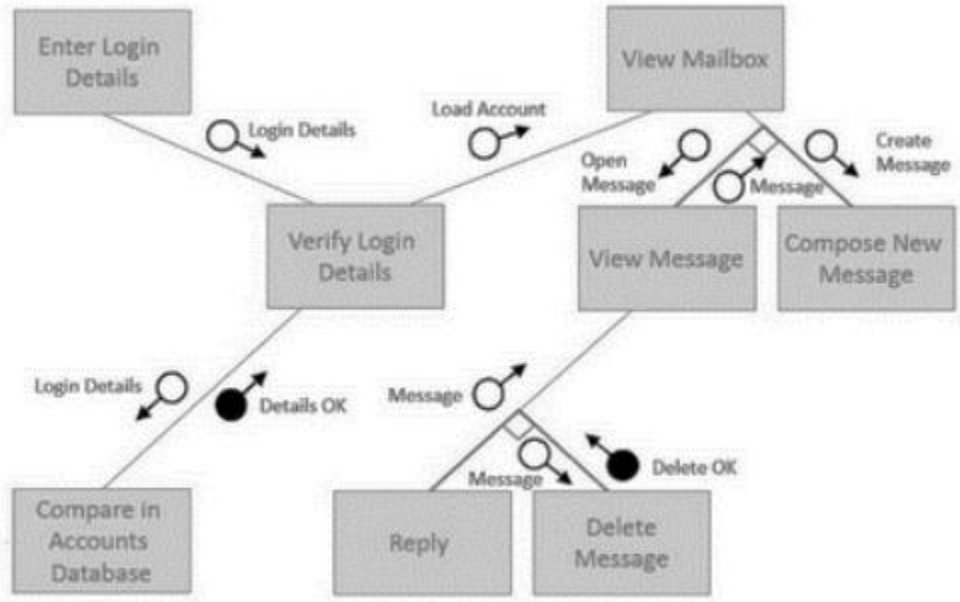

Mark Allocation: 5 mark for all correct. Partial: ½ each for correct items.

b) In a University, there are different classrooms, offices and departments. A department has a name and it contains many offices. A person working at the university has a unique ID and can be a professor or an employee.

A professor can be a full, associate or assistant professor and he/she is enrolled in one department. Offices and classrooms have a number ID, and a classroom has a number of seats. Every employee works in an office.

Draw a OOP design class diagram which consists of all the classes in your system, their attributes and operations, relationships between the classes, multiplicity specifications and other model elements that you find appropriate. (7 marks)

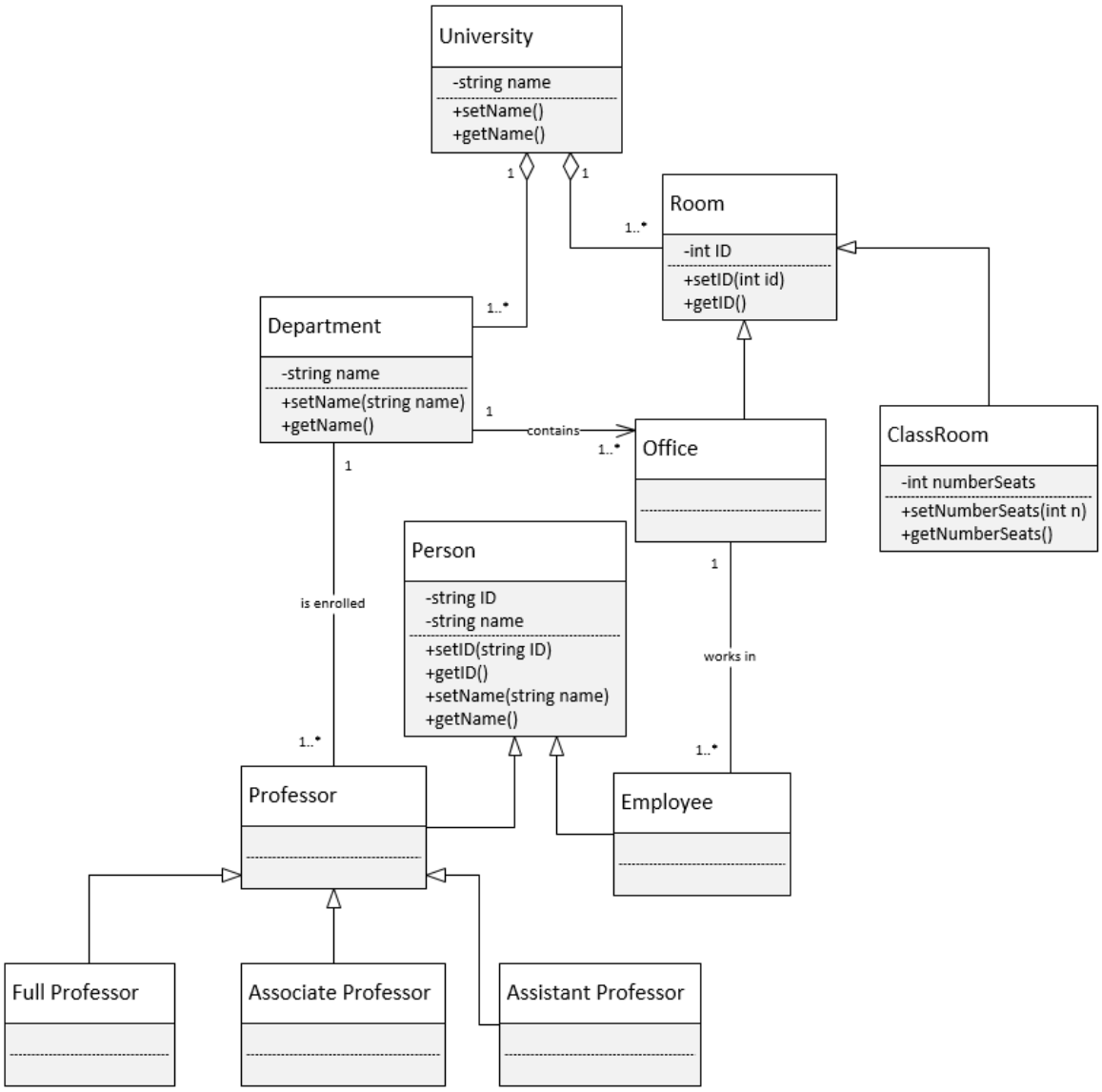

Mark Allocation: 7 mark for all correct. Partial: ½ each for correct items.

Question 9 **(23 marks)**

Case Study: A Patient Record and Scheduling System (PRSS)

Read the problem statement given below very carefully and use it to answer the questions that follow.

A patient record and scheduling system in a doctor's office is used by the receptionists, nurses, and doctors.

The receptionists use the system to enter new patient information when first-time patients visit the doctor. They also use the system to query available appointment slots and schedule all appointments. The nurses use the system to keep track of the results of each visit including diagnosis and medications. For each visit, free-form text fields are used to capture information on diagnosis and treatment. Multiple medications may be prescribed during each visit. The nurses can also access the information to print out a history of patient visits. The doctors primarily use the system to view patient history. The doctors may enter some patient treatment information and prescriptions occasionally, but most frequently they let the nurses enter this information. For payment purposes, each patient is assigned to a family.

The head of the family is responsible for payment and is also the person with the primary medical coverage. Information about doctors is maintained since a family has a primary care physician, but different doctors may be the ones seeing the patient during the visit.

a) What would be your preferred architecture if you build this system from scratch? Justify. (1 mark)

   MVC – as easy to maintain in future (1 mark)

b) What kind of integration testing would you choose to develop this system? (1 mark)

   Integration testing: top-down is the preferred choice to test the architecture first then other operations artifacts (as they do not seem very complicated) (1 mark)

c) Create a use case diagram for Patient Record and Scheduling System capturing the functional requirements (6 marks)

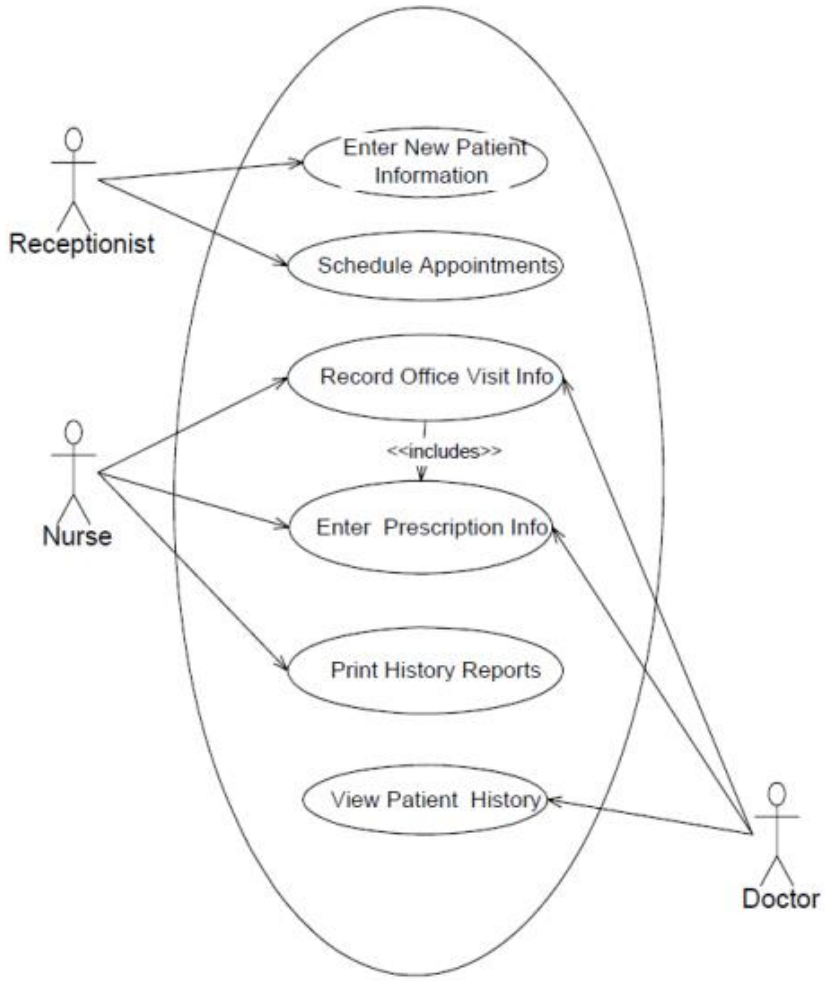

Mark Allocation: 6 mark for all correct cases and actores. Partial: ½ each for correct items.

d) Create a level 1 DFD for the above scenario. (10 marks)

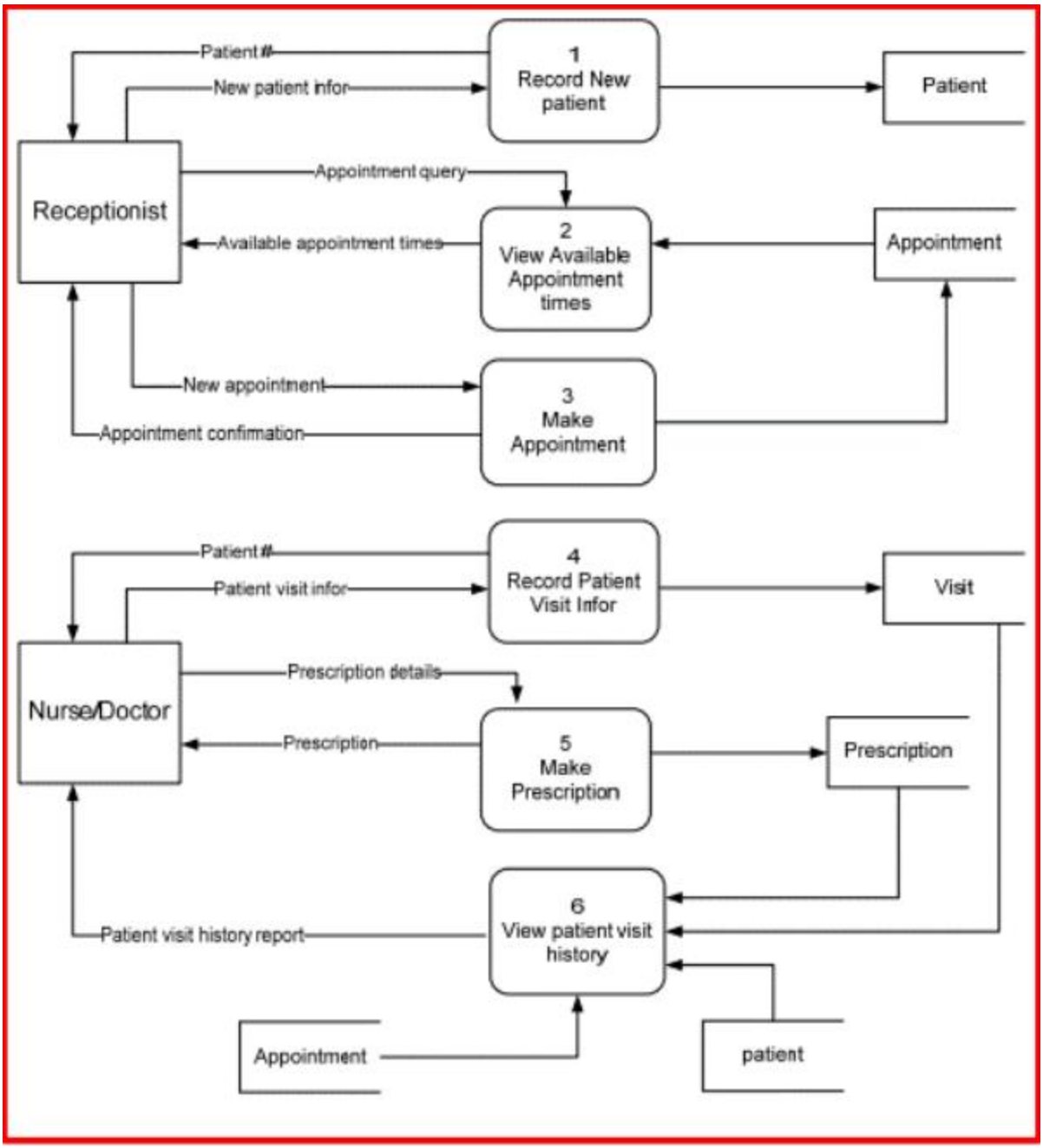

Mark Allocation: 10 mark for all correct. Partial: ½ each for correct data flow and processes.

e) The Entry of a Patient into The Emergency Room (Scenario)

One of the events of the PRSS at Suva Private Hospital is administration of patient into emergency room by receptionist.

It is recommended by the admin to thoroughly demonstrates the arrival of the patient (user) to the emergency room (environment), where they request assistance from the receptionist (user). The receptionist provides a password to the patient waiting to be called on. Upon being called on, the patient offers data for registration updates (privacy) recorded by the receptionist in the hospital

system.

The receptionist checks if the patient has a health plan in Health Insurance System and then records how this service's billing issue will be managed. After this procedure, the patient will be referred to as screening.

Create a complete sequence diagram for the above scenario. [5 marks]

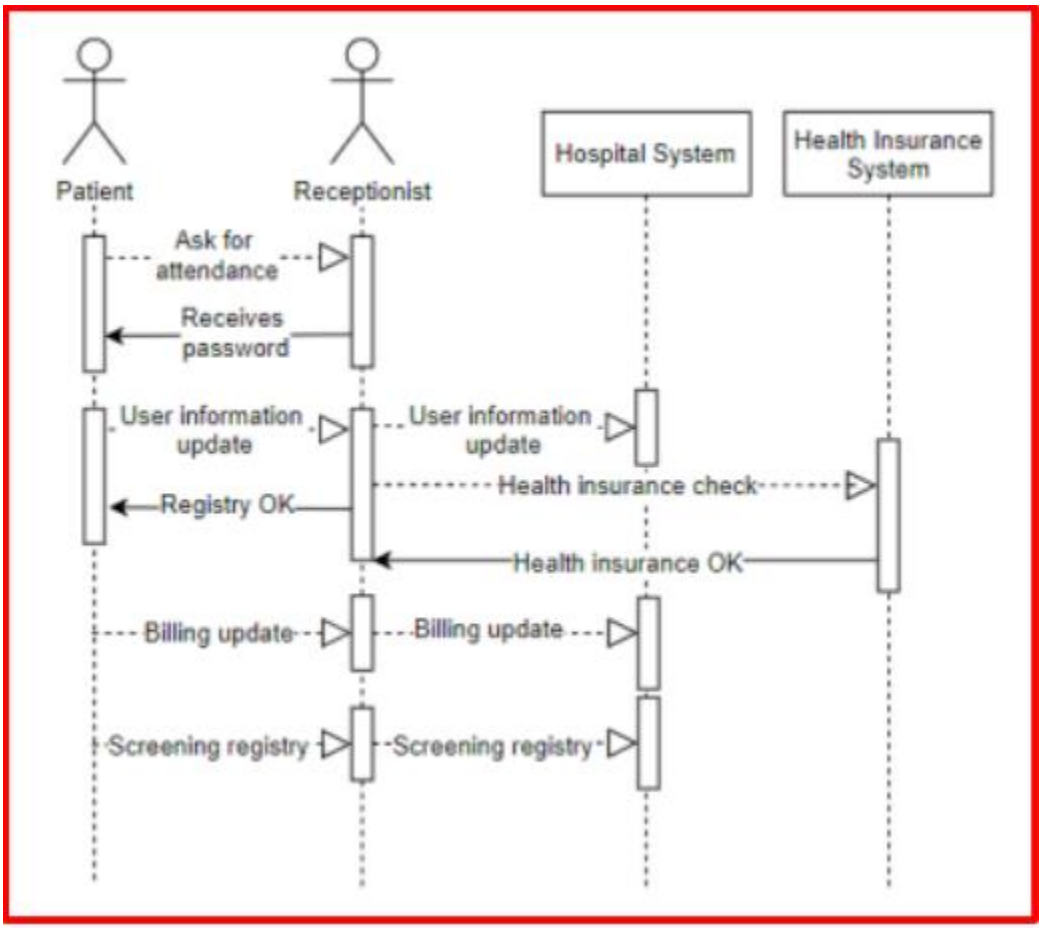

Mark Allocation: 5 mark for all correct. Partial: ½ each for correct items.

THE END